C-RAD 340 PNEUMATIC TORQUE WRENCH – TECHNICAL DATA

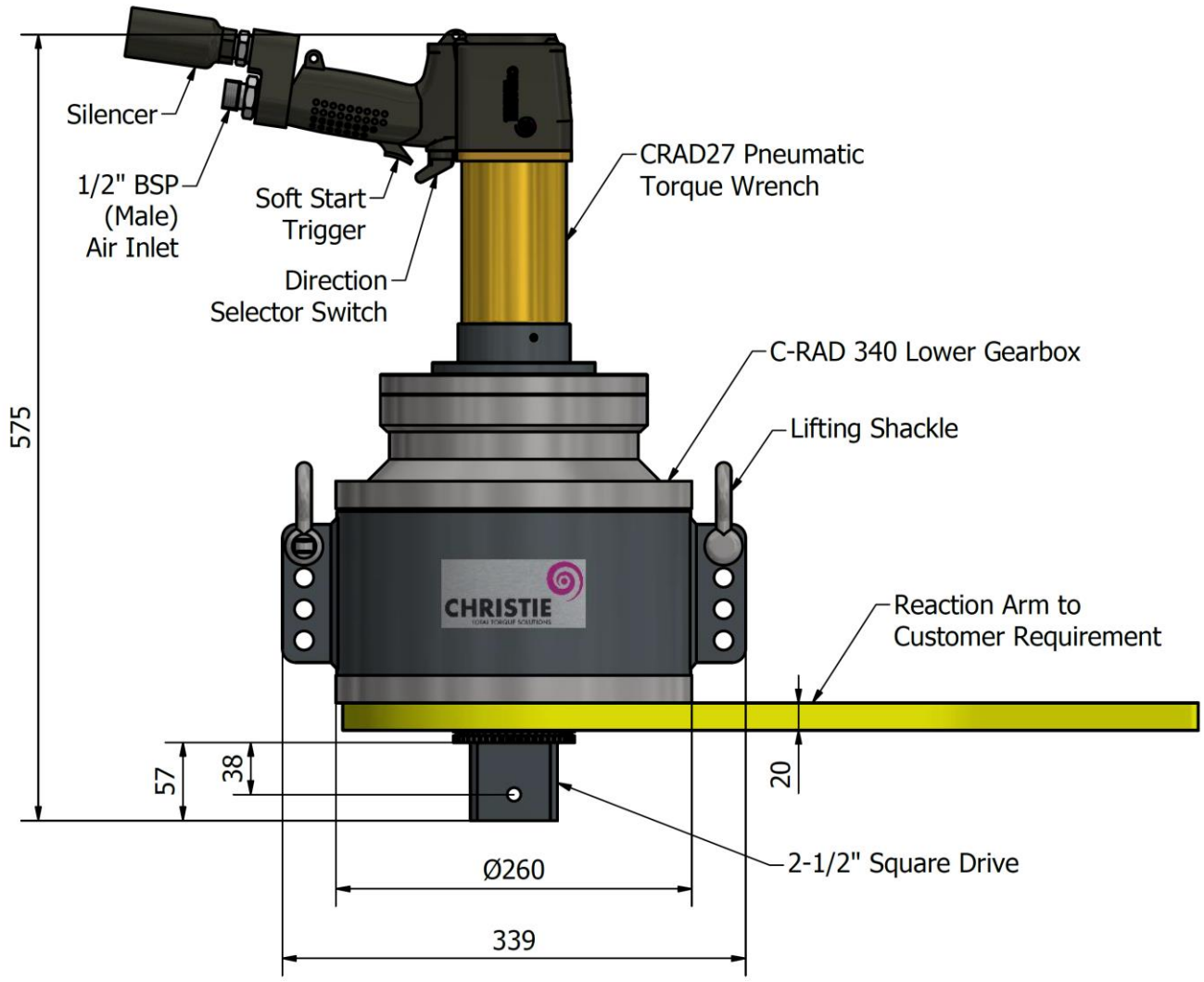

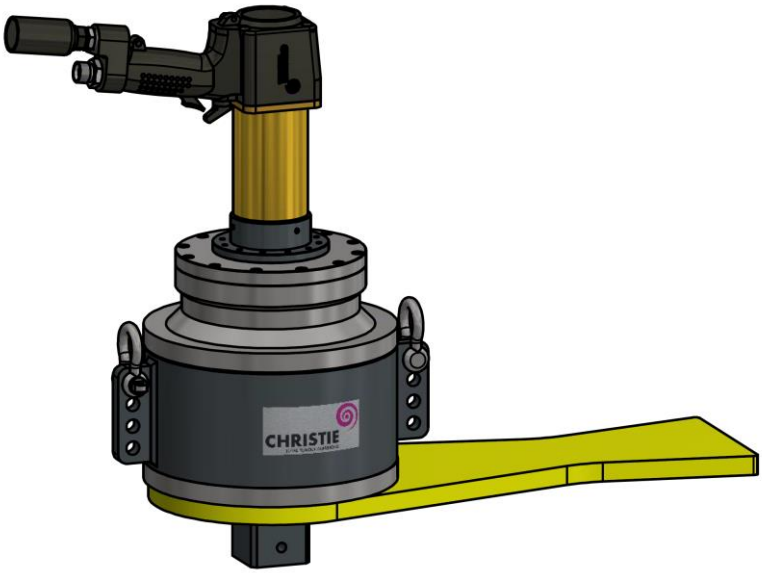

C-RAD 340 PNEUMATIC TORQUE WRENCH – TECHNICAL DATA

DESCRIPTION

The Heavy Duty C-RAD 340 Pneumatic Torque Wrench is a modular, air driven reversible, non-impacting torque delivery tool intended to tighten and un-tighten nuts, bolts and threaded fasteners.

The Heavy Duty C-RAD 340 wrench is made up of a smaller size C-RAD 27 Wrench and a lower gearbox multiplier complete with reaction and square drive.

Each Heavy Duty C-RAD 340 wrench is supplied with two calibration certificates:-

- One for use with the Heavy Duty CRAD 340 wrench Assembly (For Higher torque range)
- One for use with the smaller size C-RAD 27 wrench (For Lower Torque Range)

The heavy duty C-RAD 340 wrench assembly calibration certificate has two serial numbers displayed. One is the number stamped on the motor back plate and the other is the number stamped on the lower gearbox multiplier.

The smaller size C-RAD 27 wrench calibration certificate will contain the serial number stamped on the motor back plate only.

All C-RAD tools must always be used with the following:-

- A Clean Dry Air Supply with a minimum flow of 19L/Sec (40 CFM)
- Lubro Control Unit (with filter regulator, lubricator)
- Impact Quality Sockets
- Ring and pin fastener system (or similar)
- Reaction Arm

If the intended use is other than for nuts, bolts and threaded fasteners contact W. Christie (Industrial) LTD

It is the responsibility of the user to consider associated site risks before introducing the equipment into the work-place.

SPECIFICATION (C-RAD 340 Wrench Assembly)

Output Square Drive (Male):	2-1/2” (63.5mm)
Direction:	Forward & Reverse
Torque Accuracy:	+/- 4%
Minimum Output Torque:	10,420 Nm (7,685 lbf.ft)
Maximum Output Torque:	34,000 Nm (25,077 lbf.ft)
Speed:	0.5 rpm (Single)
Air Consumption:	19 litres/second (40 cfm)
Maximum Air Pressure:	7.2 bar (105 psi)
Noise:	Less than 85 dB(A)
Vibration:	Vibration level at handle does not exceed 2.5m/sec (Low)
Tool Weight:	83 Kg (183 lbs)

ACCESSORIES AVAILABLE

The following accessories are available upon request and can be custom made to suit requirements. Please contact W. Christie (Industrial) Limited for more information:-

- Special Reactions
- Custom Lifting Points
- Nose Cone Extensions
- Offset Gearbox
- Custom Lubro Units
- Impact Quality Sockets
- Torque Checking System (Rundown Fixture)

NOTE:- For C-RAD 27 Pneumatic Torque Wrench information please refer to separate technical data sheet.

No statement or data within this literature is warranted or guaranteed to be accurate.

CHRISTIE
TOTAL TORQUE SOLUTIONS

W. CHRISTIE (INDUSTRIAL) LTD
CHRISTIE HOUSE
MEADOWBANK ROAD
ROTHERHAM
SOUTH YORKSHIRE
S61 2NF UK
T: +44(0)1709 550088 F: +44(0)1709 550030
E: INFO@WCHRISTIE.COM W: WWW.WCHRISTIE.COM