C-RAD 40DX PNEUMATIC TORQUE WRENCH – TECHNICAL DATA

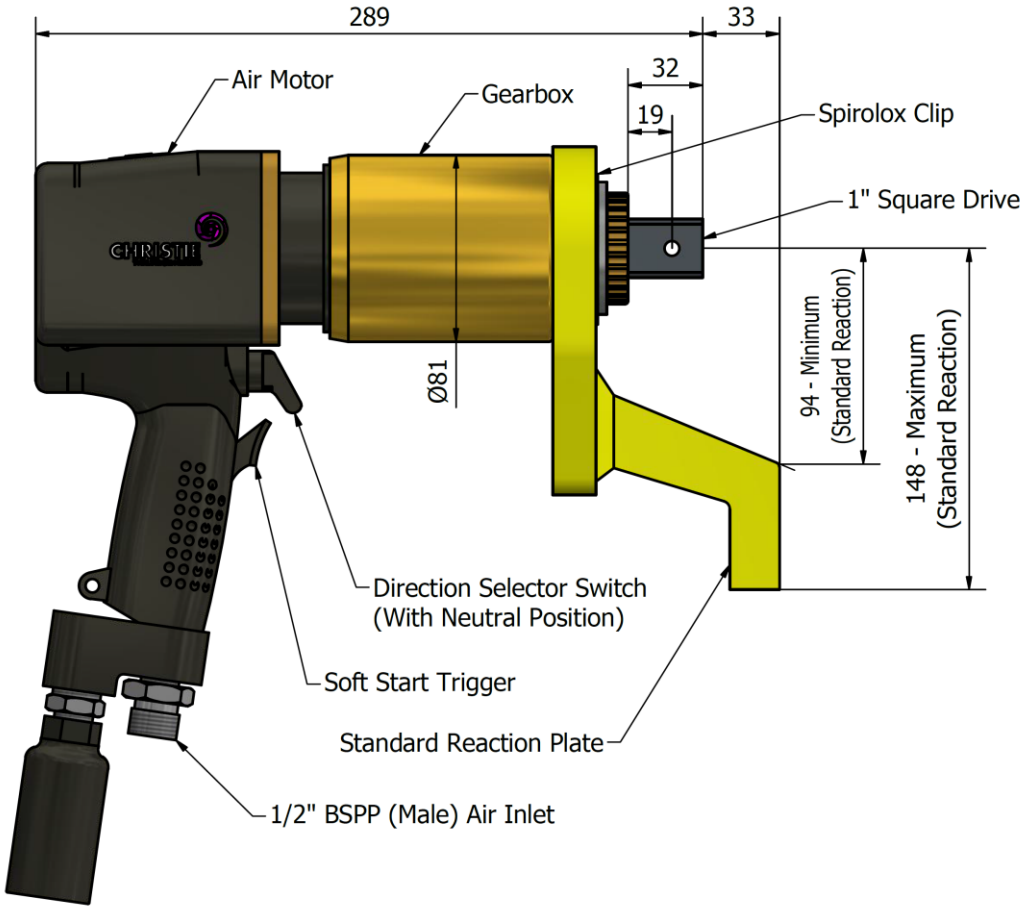

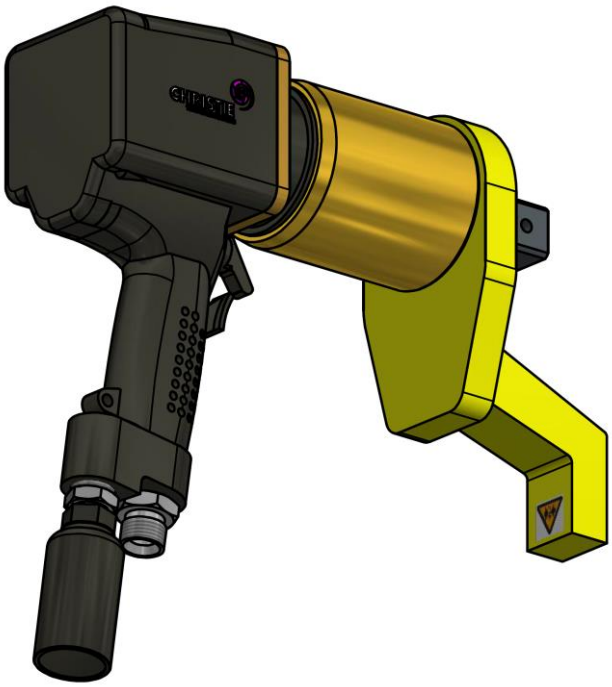

No statement or data within this literature is warranted or guaranteed to be accurate.

C-RAD 40DX PNEUMATIC TORQUE WRENCH – TECHNICAL DATA

DESCRIPTION

The C-RAD 40DX Pneumatic Torque Wrench is a hand held, non-impacting air driven power tool designed to quickly and accurately apply torque to and remove threaded fasteners.

The reaction force works in the opposite direction to the applied torque. The point of reaction should be kept as far away as practicable from the centre of the gearbox to minimise this force.

Torque is controlled by regulating air pressure via a Lubro control unit. Corresponding pressure settings and torques are determined using the graph provided.

The C-RAD 40DX must always be operated with the following:-

- Clean dry air supply with a minimum flow of 19 litres/second (40 cfm)
- Lubro Control Unit (with filter regulator, lubricator)
- Minimum Hose Bore 1/2" (12mm)
- Impact Quality Sockets
- Reaction Arm

SPECIFICATION

Output Square Drive (Male):	1" (25.4mm)
Direction:	Forward & Reverse
Torque Accuracy:	+/- 4%
Minimum Output Torque:	1,200 Nm (885 lbf.ft)
Maximum Output Torque:	4,000 Nm (2950 lbf.ft)
Speed:	6 rpm (Single)
Air Consumption:	19 litres/second (40 cfm)
Maximum Air Pressure:	7.2 bar (105 psi)
Noise:	Less than 85 dB(A)
Vibration:	Vibration level at handle does not exceed 2.5m/sec (Low)
Tool Weight:	7 Kg (15.4 lbs)
Reaction Plate Weight:	2 Kg (4.4 lbs)

ACCESSORIES AVAILABLE

The following accessories are available upon request and can be custom made to suit requirements. Please contact W. Christie (Industrial) Limited for more information:-

- Special Reactions
- Custom Lifting Points
- Nose Cone Extensions
- Offset Gearbox
- Custom Lubro Units
- Impact Quality Sockets
- Torque Checking System (Rundown Fixture)

No statement or data within this literature is warranted or guaranteed to be accurate.

CHRISTIE
TOTAL TORQUE SOLUTIONS

W. CHRISTIE (INDUSTRIAL) LTD
CHRISTIE HOUSE
MEADOWBANK ROAD
ROTHERHAM
SOUTH YORKSHIRE
S61 2NF UK
T: +44(0)1709 550088 F: +44(0)1709 550030
E: INFO@WCHRISTIE.COM W: WWW.WCHRISTIE.COM