CHRISTIE
TOTAL TORQUE SOLUTIONS

CCR5 75mm A/F HEXAGON HYDRAULIC TORQUE WRENCH – TECHNICAL DATA

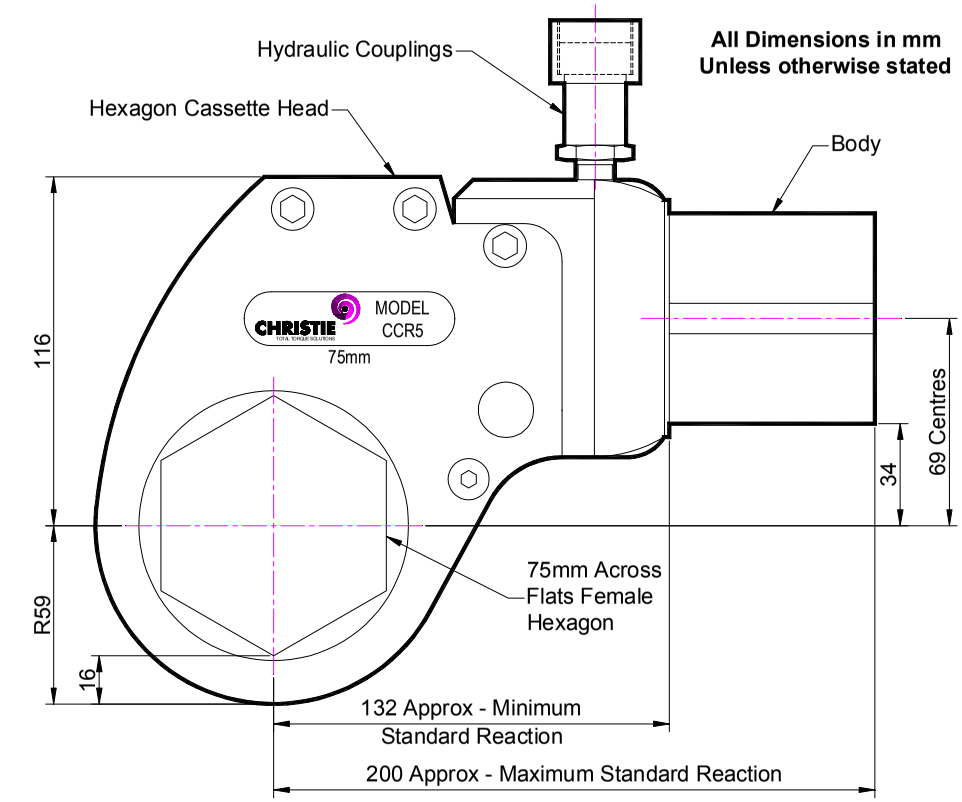

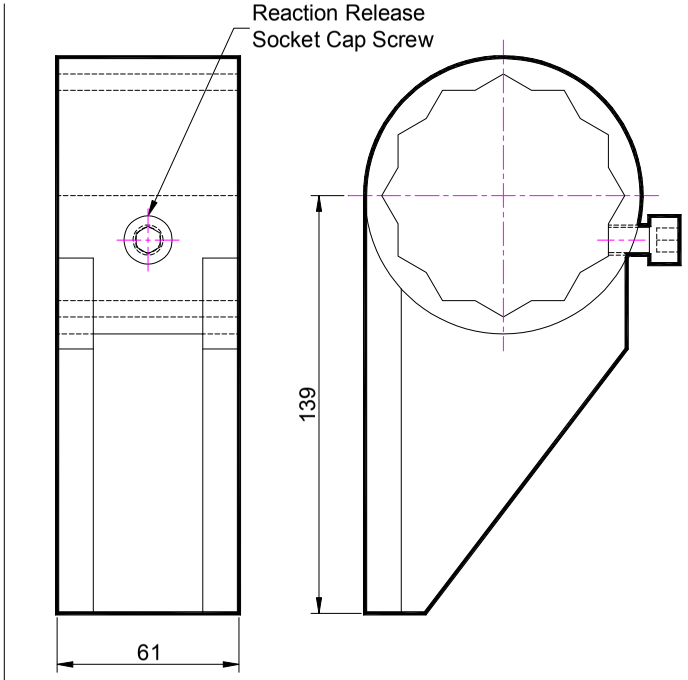

Reaction Foot

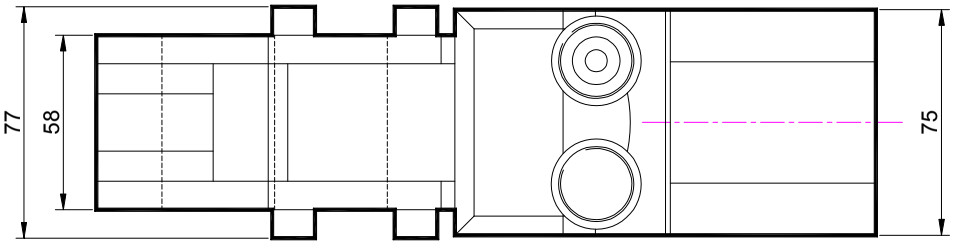

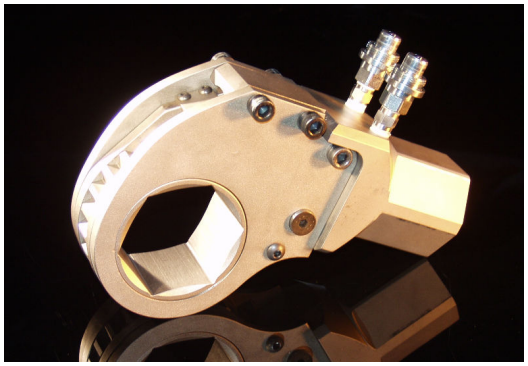

No statement or data within this literature is warranted or guaranteed to be accurate.

CCR5 75mm A/F HEXAGON HYDRAULIC TORQUE WRENCH – TECHNICAL DATA

DESCRIPTION

The CCR5 Hydraulic Torque Wrench is a direct fitting hydraulic driven power tool designed to accurately apply torque to tighten and remove threaded fasteners.

The wrench has an open hexagon designed to fit directly onto the nut or bolt head. This tooling is ideal for use on applications with limited overhead access or with fasteners having excessive thread protrusion.

Torque is controlled by regulating the hydraulic pressure via a separate hydraulic power pack. Corresponding pressure settings and torques are determined using the graph provided.

The reaction foot is rotatable and reversible to allow for tightening and un-tightening reaction positions. It is possible to remove the reaction foot and react with the tool body's hexagon section.

The CCR wrench must always be operated with the following:-

- Double Acting Hydraulic Power Pack capable of 10,000 psi (690 bar) with low pressure return
- Hydraulic Mineral Oil (None Synthetic, Grade 32 or equivalent)
- Hydraulic Hoses (Working Pressure 10,000 psi, 6mm Bore)

SPECIFICATION

Hexagon Size:	75mm (Female)
Torque Accuracy:	+/- 3%
Minimum Output Torque:	1,580 Nm (1,160 lbf.ft)
Maximum Output Torque:	7,888 Nm (5,800 lbf.ft)
Maximum Working Pressure:	690 bar (10,000 psi)
Maximum Return Pressure:	50 bar (725 psi)
Total Weight (Including Reaction):	~13Kg (28.66 lbs)
Wrench Port Size:	1/4" NPT

ACCESSORIES AVAILABLE

The following accessories are available upon request and can be custom made to suit requirements. Please contact W. Christie (Industrial) Limited for more information:-

- Special Reactions
- Alternative Hexagon Cassette sizes available
- Hexagon Reducing Sleeves (for use on smaller bolt sizes)
- Male Hexagon Adaptors
- Male Square Adaptors

No statement or data within this literature is warranted or guaranteed to be accurate.

CHRISTIE
TOTAL TORQUE SOLUTIONS

W. CHRISTIE (INDUSTRIAL) LTD
CHRISTIE HOUSE
MEADOWBANK ROAD
ROTHERHAM
SOUTH YORKSHIRE
S61 2NF UK
T: +44(0)1709 550088 F: +44(0)1709 550030
E: INFO@WCHRISTIE.COM W: WWW.WCHRISTIE.COM