CHRISTIE
TOTAL TORQUE SOLUTIONS

ADR70XD-LPR POWER PACK – TECHNICAL DATA

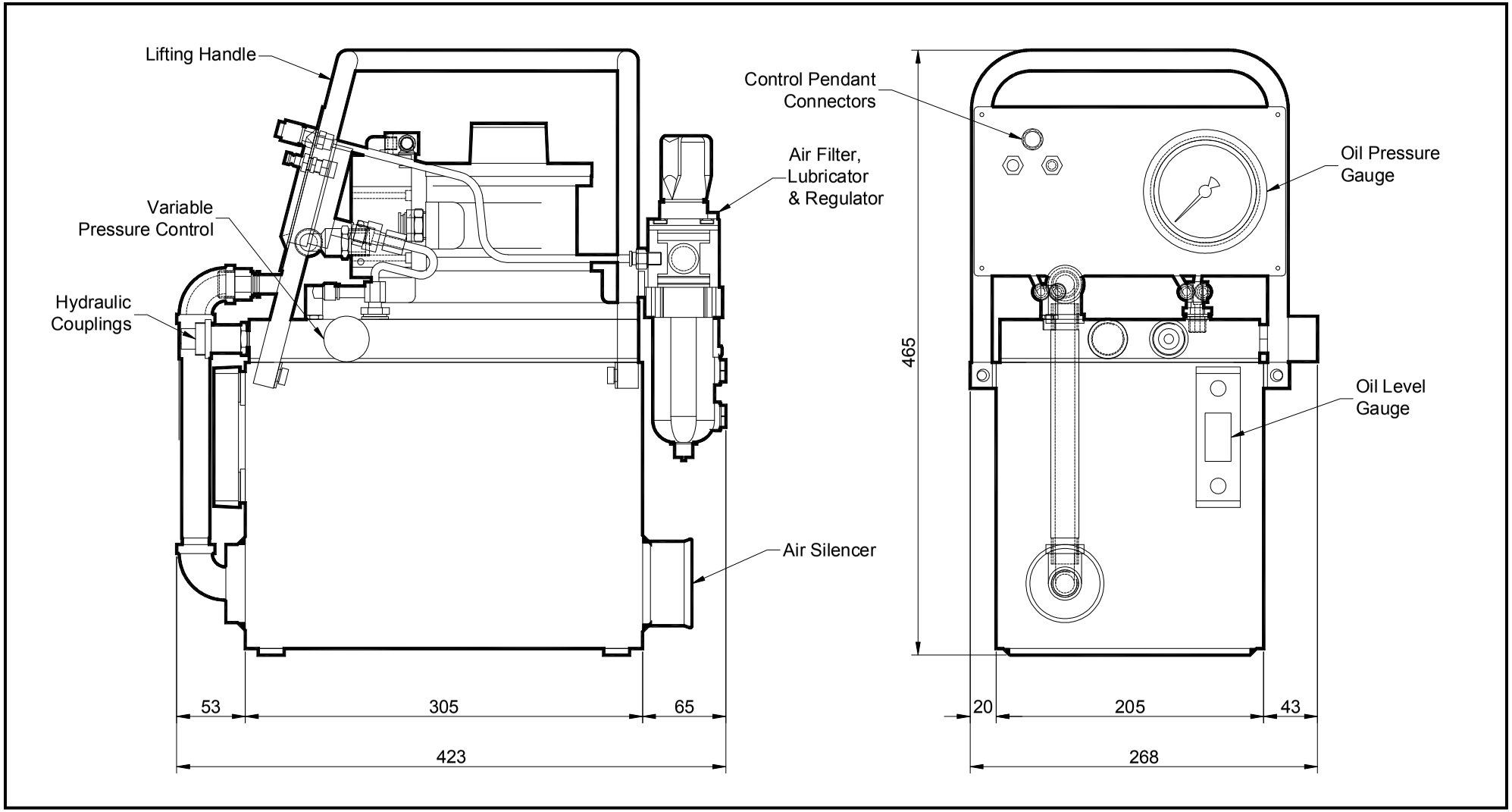

No statement or data within this literature is warranted or guaranteed to be accurate.

ADR70XD-LPR POWER PACK – TECHNICAL DATA

DESCRIPTION

The ADR70XD-LPR power pack is a portable, air actuated, double acting, “Xtra” pump with a low pressure return suitable for desert operation.

The Christie range of power packs are the toughest on the market, combining effortless power with supreme performance.

The unit is fitted with a “quiet air” silencer chamber to reduce noise output and remove the need for hearing protection. The air exhaust layout also acts as a temperature regulator in hot and cold climates.

The power pack is supplied complete with one control pendant / hose assembly and two hydraulic hose assemblies

The unit is operated using the two button control pendant.

SPECIFICATION

Air Consumption (In):	38-59 litres/second (80-125 cfm)
Maximum Air Pressure (In):	6.2 bar (90 Psi)
Maximum Hydraulic Pressure (Out):	690 bar (10,000 psi)
Pressure Gauge Units:	psi or bar
Flow Stage 1 (Out):	12 litres/minute (0.424 cfm)
Flow Stage 2 (Out):	1.7 litres/minute (0.06 cfm)
Oil Reservoir Capacity:	7 Litres (427.17 in^3)
Hydraulic Hoses Length:	4m
Total Weight (Excluding Hoses):	~39 Kg (85.98 lb)
Noise:	Less than 85 dB(A)
Hydraulic Port Size:	1/4" NPT



ACCESSORIES AVAILABLE

The following accessories are available upon request and can be custom made to suit requirements. Please contact W. Christie (Industrial) Limited for more information:-

- Extra Length hoses
- Protective storage case
- Portable trolley

No statement or data within this literature is warranted or guaranteed to be accurate.

CHRISTIE
TOTAL TORQUE SOLUTIONS

W. CHRISTIE (INDUSTRIAL) LTD
CHRISTIE HOUSE
MEADOWBANK ROAD
ROTHERHAM
SOUTH YORKSHIRE
S61 2NF UK
T: +44(0)1709 550088 F: +44(0)1709 550030
E: INFO@WCHRISTIE.COM W: WWW.WCHRISTIE.COM