2500Nm HORIZONTAL RUNDOWN FIXTURE – TECHNICAL DATA

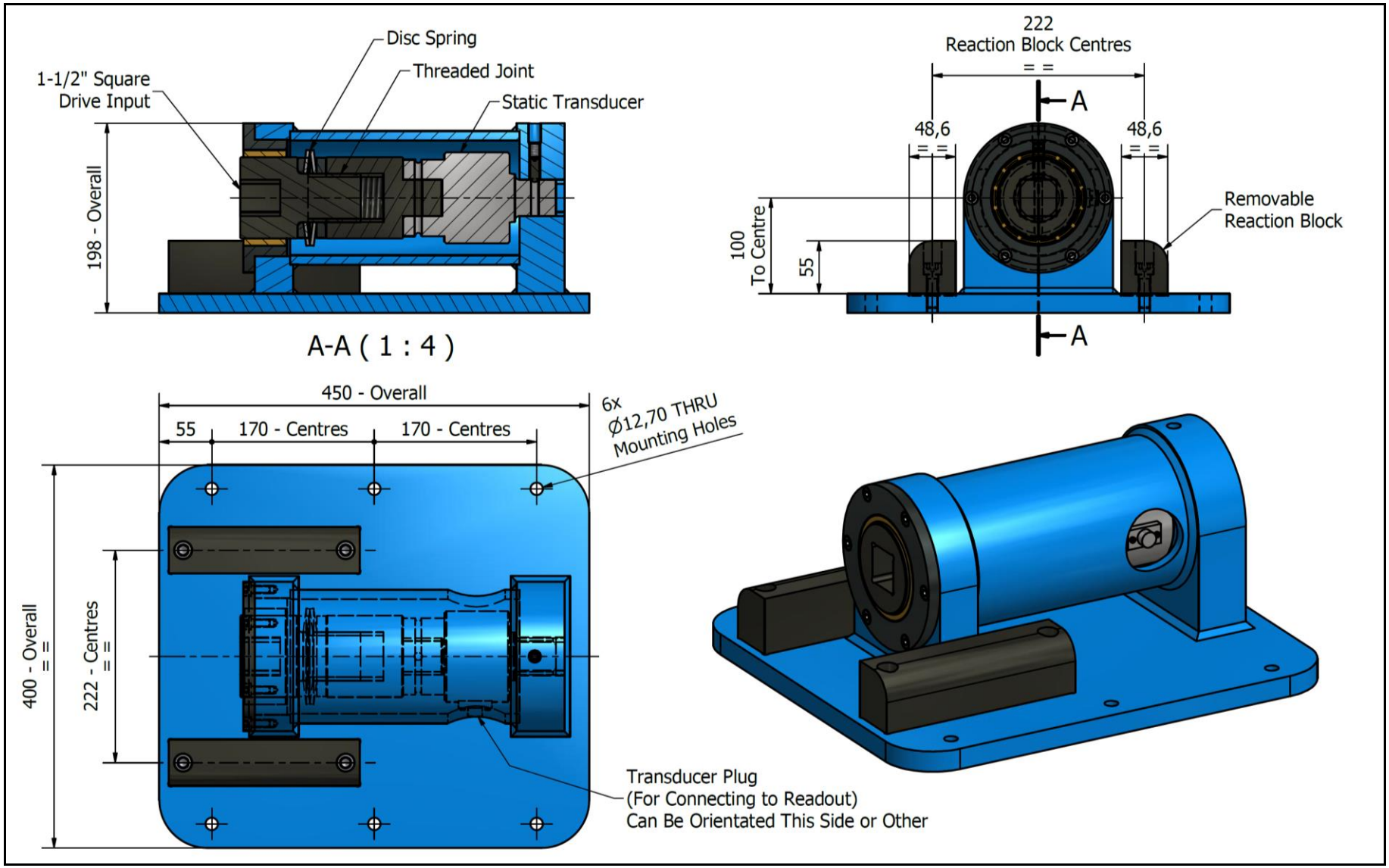

No statement or data within this literature is warranted or guaranteed to be accurate.

2500Nm HORIZONTAL RUNDOWN FIXTURE – TECHNICAL DATA

DESCRIPTION

The Christie Horizontal Rundown Fixture is designed to simulate the working conditions of a screwed or bolted joint.

The Static Transducer is supplied with a calibration certificate. (Traceable to national standards)

The fixture is supplied with a static transducer and used in conjunction with a readout, the Rundown Assembly is used for non-impacting power tool testing and calibration.

For intermittent or short term use, the Horizontal Rundown Assembly can be supplied on a hire basis.

SPECIFICATION

Input Square Drive (Female):	1-1/2" (38.1mm)
Tighten (Calibration) Direction:	Clockwise
Static Transducer Torque Accuracy:	+/- 0.5%
Transducer Minimum Calibrated Torque:	250 Nm (184.4 Lbf.ft)
Transducer Maximum Torque:	2,500 Nm (1,843.6 Lbf.ft)
Total Weight:	~67 Kg (147.71 lbs)
Reaction Layout:	As Shown
Base Mounting Configuration:	6 Holes Ø12.7mm
Grease (For Internal Thread):	Molybdenum Disulphide (Moly Benton Grease)

ACCESSORIES AVAILABLE

The following accessories are available upon request and can be custom made to suit requirements. Please contact W. Christie (Industrial) Limited for more information:-

- Input Square Drive Reducing Sleeves
- Calibration Table – To suit your requirements
- Wrench Test Reaction

RELATED TECHNICAL DATA SHEETS

The following technical data sheets may be of interest. Please contact W. Christie (Industrial) Limited for more information:-

- C-RAD Pneumatic Torque Wrench
- PM Pneumatic Torque Wrench
- BC-RAD Battery Torque Wrench

No statement or data within this literature is warranted or guaranteed to be accurate.

CHRISTIE
TOTAL TORQUE SOLUTIONS

W. CHRISTIE (INDUSTRIAL) LTD
CHRISTIE HOUSE
MEADOWBANK ROAD
ROTHERHAM
SOUTH YORKSHIRE
S61 2NF UK
T: +44(0)1709 550088 F: +44(0)1709 550030
E: INFO@WCHRISTIE.COM W: WWW.WCHRISTIE.COM