HYSPAN REMOTE HYDRAULIC TORQUE TOOL
HY20RT - TECHNICAL DATA

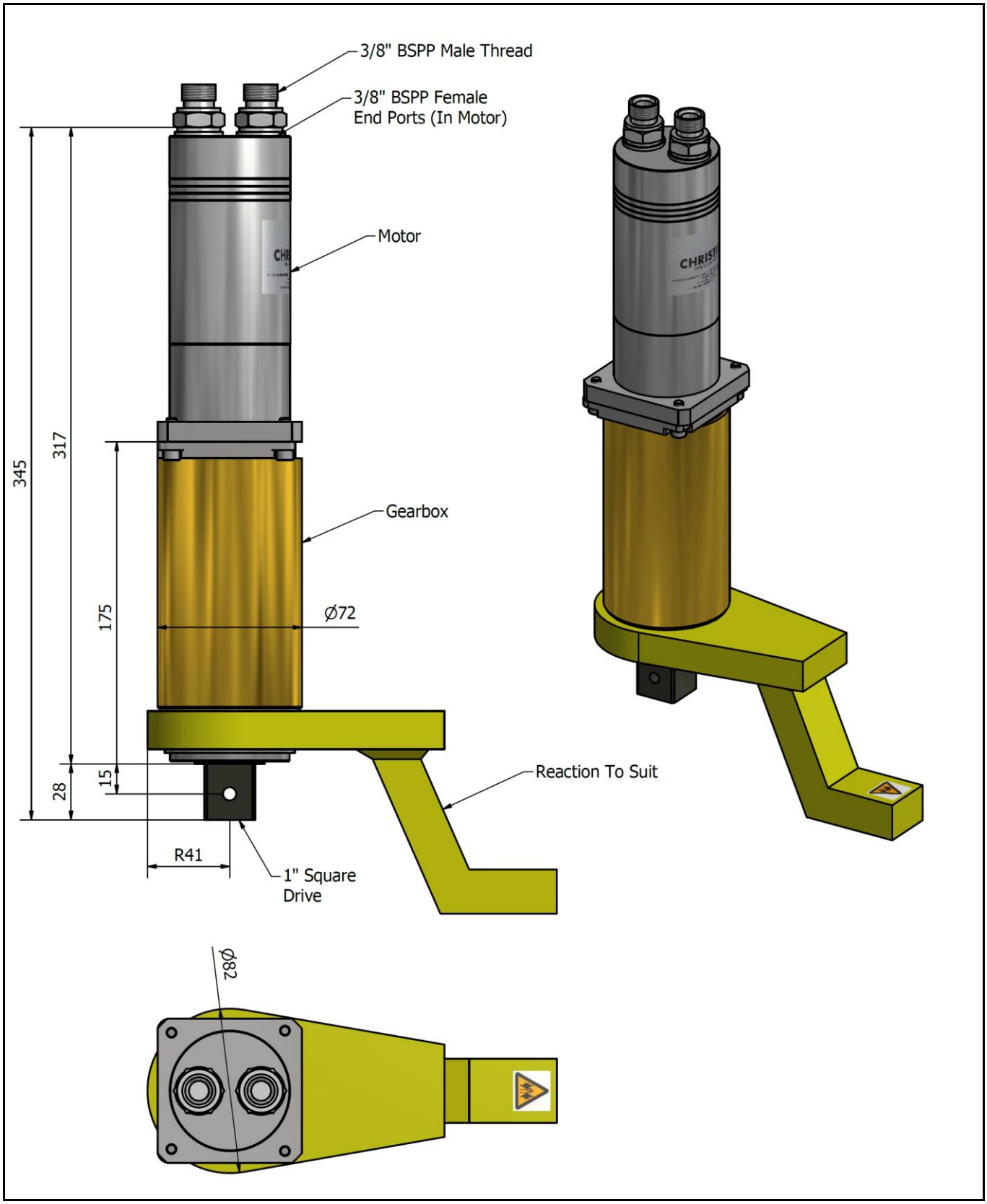

HYSPAN REMOTE HYDRAULIC TORQUE TOOL
HY20RT - TECHNICAL DATA

DESCRIPTION

The Hyspan remote hydraulic torque multiplier is a remotely operated, non-impacting hydraulic driven power tool designed to quickly and accurately apply torque to tighten and remove threaded fasteners. The unit is ideal for all types of remote bolting applications, above and below ground, offshore and sub-sea. It may be powered from the customers own hydraulic supply or via a Christie supplied power pack.

Torque is controlled by regulating the hydraulic pressure via a separate hydraulic power pack. Corresponding pressure settings and torques are determined using the graph provided.

The reaction force works in the opposite direction to the applied torque. The point of reaction should be kept as far away as practicable from the centre of the square drive to minimise this force.

The unit is operated remotely.

The Hyspan multiplier must always be operated with the following:-

- Double acting hydraulic power pack capable of 2,030 psi (140 bar)
- Power pack flow rate of 7-22 litres/minute (0.25-0.78 cfm)
- Hydraulic mineral oil. (none synthetic, Grade 32 or equivalent.
- Hydraulic hoses. Working pressure To Suit Power Pack, 3/8" to 1/2” (10 to 12.7mm) bore.
- Impact quality sockets or adaptors

SPECIFICATION

Output Square Drive (Male):	1" (25.4mm)
Direction:	Forward & Reverse
Minimum Output Torque:	400 Nm (300 lbf.ft)
Maximum Output Torque:	2,000 Nm (1,450 lbf.ft)
Torque Accuracy:	+/- 4%
Speed (Single):	8 rpm
Noise:	Less than 85 dB(A)
Vibration:	Vibration level does not exceed 2.5m/sec (Low)
Total Weight (Including Reaction):	<22.5 Kg (<49.6 lbs)
Wrench Port Size:	3/8” BSPP

ACCESSORIES AVAILABLE

The following accessories are available upon request and can be custom made to suit requirements. Please contact W. Christie (Industrial) Limited for more information:-

- Special reactions
- Custom lifting points
- Nose Cone Extensions
- Offset Gearbox
- Impact quality sockets and adaptors
- Torque checking system (Rundown Fixture)

No statement or data within this literature is warranted or guaranteed to be accurate.

CHRISTIE
TOTAL TORQUE SOLUTIONS

W. CHRISTIE (INDUSTRIAL) LTD
CHRISTIE HOUSE
MEADOWBANK ROAD
ROTHERHAM
SOUTH YORKSHIRE
S61 2NF UK
T: +44(0)1709 550088 F: +44(0)1709 550030
E: INFO@WCHRISTIE.COM W: WWW.WCHRISTIE.COM