COG-VT-80 & C-RAD 10L ASSEMBLY – TECHNICAL DATA

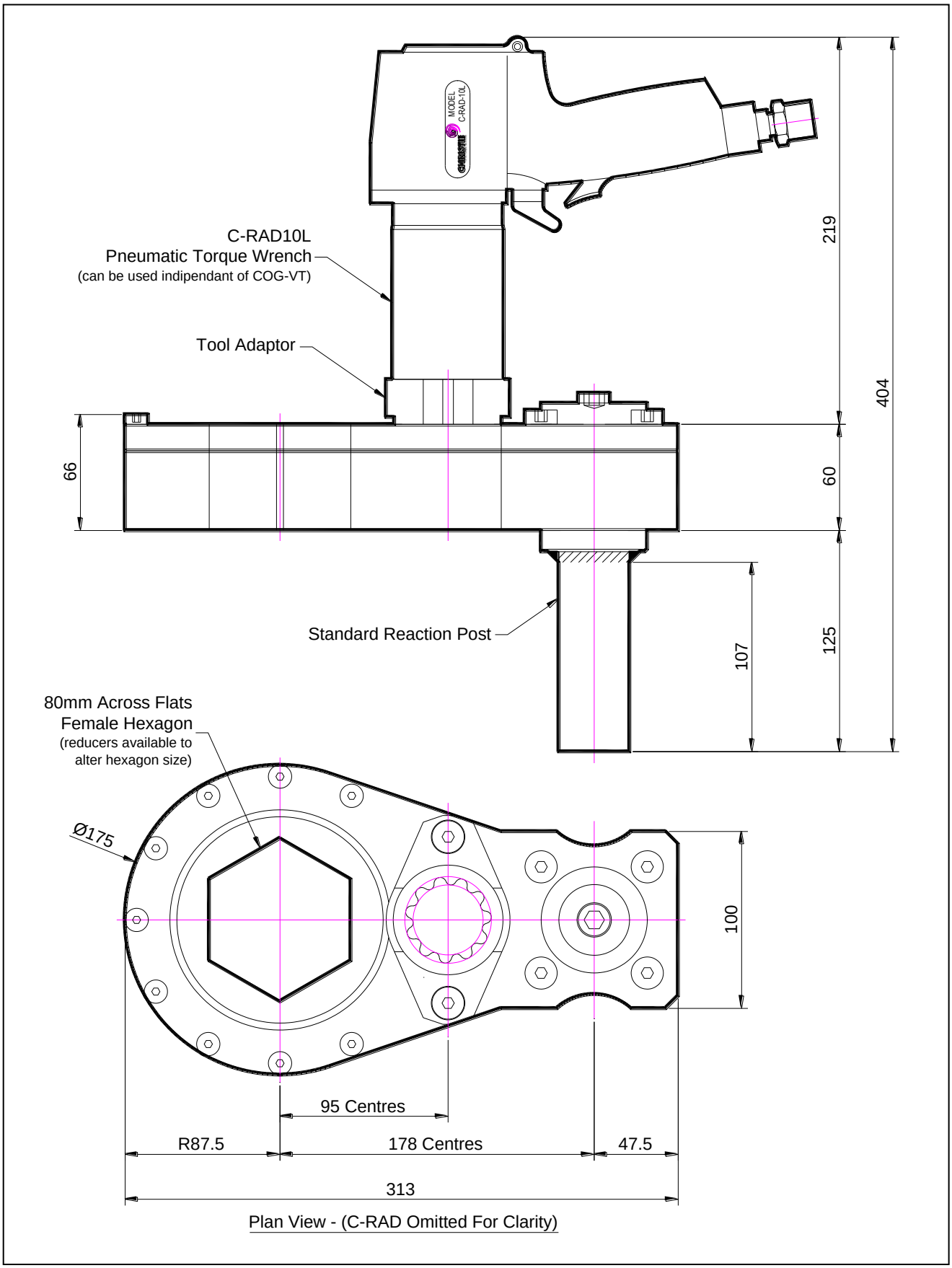

Plan View - (C-RAD Omitted For Clarity)

No statement or data within this literature is warranted or guaranteed to be accurate.

COG-VT-80 & C-RAD 10L ASSEMBLY – TECHNICAL DATA

DESCRIPTION

The COG-VT (Christie offset gearbox) is Manufactured for high speed tightening and un-tightening of fasteners with overhead obstructions or nuts with protruding threads.

The COG-VT efficiently transfers power directly from tool to fastener at an impressive 2.6:1 multiplication.

The C-RAD10L Pneumatic torque wrench can be detached from the gearbox and used independently on other bolting applications.

Bespoke Offset Gearbox designs are available for other makes of torque tool.

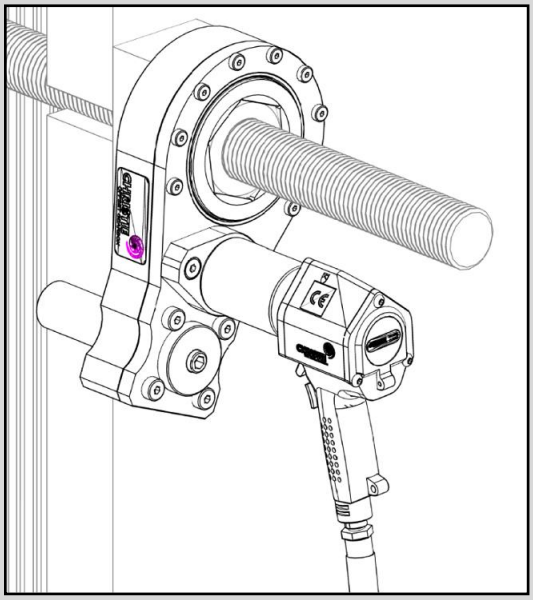

SPECIFICATION

Hexagon Size:	80mm (Female)	
Direction:	Forward & Reverse	
Torque Accuracy:	+/- 5%	
Gearbox Ratio (Approximate):	2.6:1	
Minimum COG-VT Output Torque:	390 Nm (288 Lbf.ft)	- with C-RAD 10L
Maximum COG-VT Output Torque:	2,470 Nm (1,821 Lbf.ft)	- with C-RAD 10L
COG-VT Output Speed:	~11.5 rpm	- with C-RAD 10L
Total Weight:	19 Kg (42 lbs)	- with C-RAD 10L
Gearbox Housing Material:	Aluminium	- unless specified

ACCESSORIES AVAILABLE

The following accessories are available upon request and can be custom made to suit requirements. Please contact W. Christie (Industrial) Limited for more information:-

- Special Reactions
- Hexagon Reducing Sleeves (For use on smaller bolt sizes)
- Other Shape Reducing Sleeves (To suit customer specific requirements)
- Alternative Tool adaptors (for use with other Christie torque wrenches)
- C-RAD10L Reaction Plates (For use on other bolting applications)
- Lubro Units (Data sheets available upon request)

THIS DATA SHEET SHOULD BE USED IN CONJUNCTION WITH:-

"C-RAD 10L PNEUMATIC TORQUE WRENCH – TECHNICAL DATA"
REF: 3-10342-CRAD

No statement or data within this literature is warranted or guaranteed to be accurate.

CHRISTIE
TOTAL TORQUE SOLUTIONS

W. CHRISTIE (INDUSTRIAL) LTD
CHRISTIE HOUSE
MEADOWBANK ROAD
ROTHERHAM
SOUTH YORKSHIRE
S61 2NF UK
T: +44(0)1709 550088 F: +44(0)1709 550030
E: INFO@WCHRISTIE.COM W: WWW.WCHRISTIE.COM