1IBT HYDRAULIC TORQUE WRENCH – TECHNICAL DATA

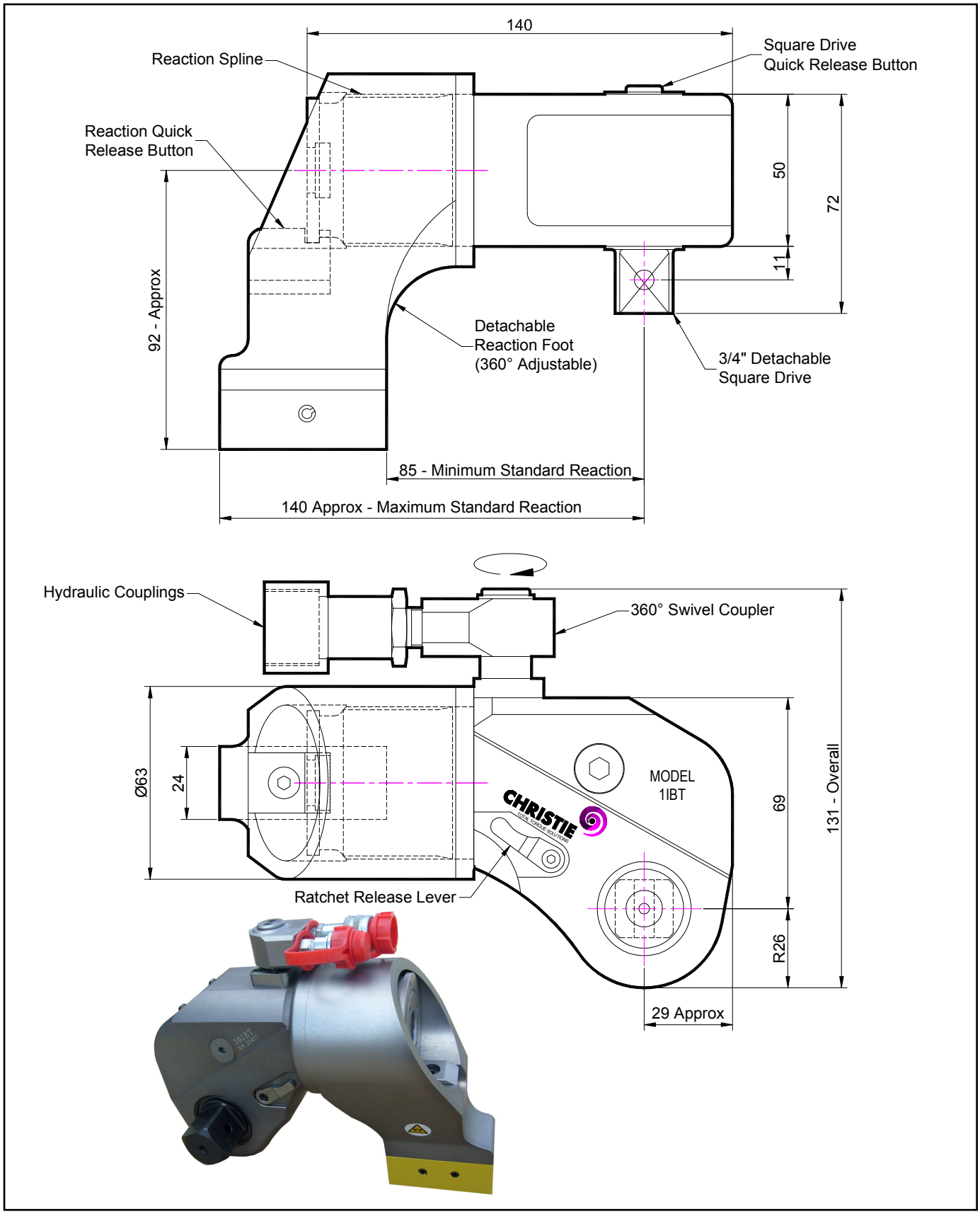

No statement or data within this literature is warranted or guaranteed to be accurate.

1IBT HYDRAULIC TORQUE WRENCH – TECHNICAL DATA

DESCRIPTION

The 1IBT Hydraulic Torque Wrench is a lightweight square drive hydraulic driven power tool designed to accurately apply torque to tighten and remove threaded fasteners.

The wrench incorporates a swivel coupler that can be rotated through a full 360° allowing hoses to be conveniently directed away from obstructions.

Torque is controlled by regulating the hydraulic pressure via a separate hydraulic power pack. Corresponding pressure settings and torques are determined using the graph provided.

The square drive is quickly detachable from the wrench body to allow for tightening and un-tightening applications.

The reaction foot is rotatable to allow for different bolting applications.

The IBT wrench must always be operated with the following:-

- Double Acting Hydraulic Power Pack capable of 10,000 psi (690 bar) with low pressure return
- Hydraulic Mineral Oil (None Synthetic, Grade 32 or equivalent)
- Hydraulic Hoses (Working Pressure 10,000 psi, 6mm Bore)
- Impact Quality Sockets
- Reaction Foot

SPECIFICATION

Output Square Drive (Male):	3/4” (19.05mm)
Torque Accuracy:	+/- 3%
Minimum Output Torque:	183 Nm (135 lbf.ft)
Maximum Output Torque:	up to 1,755 Nm (1,294 lbf.ft)
Maximum Working Pressure:	690 bar (10,000 psi)
Maximum Return Pressure:	50 bar (725 psi)
Total Weight (Including Reaction):	2.5Kg (5.51 lbs)
Swivel Coupler Port Size:	1/8” NPT

ACCESSORIES AVAILABLE

The following accessories are available upon request and can be custom made to suit requirements. Please contact W. Christie (Industrial) Limited for more information:-

- Special Reactions
- Male Hexagon Adaptors
- Female Direct Fit Adaptors
- Impact Quality Sockets
- Torque Checking System (Rundown Fixture)

No statement or data within this literature is warranted or guaranteed to be accurate.

CHRISTIE
TOTAL TORQUE SOLUTIONS

W. CHRISTIE (INDUSTRIAL) LTD
CHRISTIE HOUSE
MEADOWBANK ROAD
ROTHERHAM
SOUTH YORKSHIRE
S61 2NF UK
T: +44(0)1709 550088 F: +44(0)1709 550030
E: INFO@WCHRISTIE.COM W: WWW.WCHRISTIE.COM