B-RAD 15K XTREME
BRUSHLESS BATTERY TORQUE WRENCH – TECHNICAL DATA

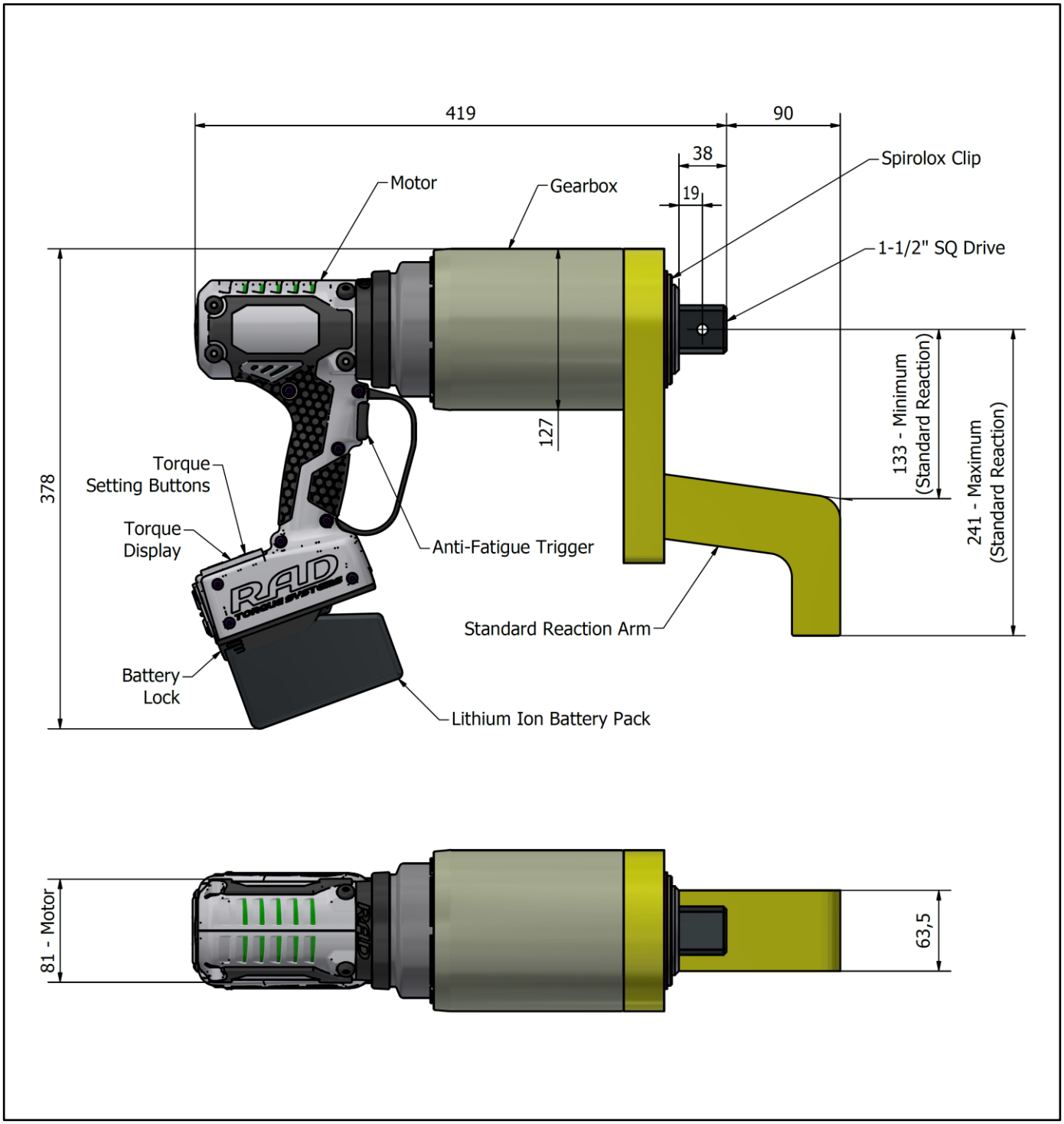

B-RAD 15K XTREME
BRUSHLESS BATTERY TORQUE WRENCH – TECHNICAL DATA

DESCRIPTION

The B-RAD 15K XTREME Battery Torque Wrench is a hand held, non-impacting battery driven power tool designed to apply torque to tighten and remove threaded fasteners.

The reaction force works in the opposite direction to the applied torque. The point of reaction should be kept as far away as practicable from the centre of the gearbox to minimise this force.

Torque is controlled by use of the torque setting buttons. The torque figure is displayed on the torque display.

The B-RAD 15K XTREME must always be operated with the following:-

- Lithium Ion Battery Pack (Supplied)
- Impact Quality Sockets
- Reaction Arm
- Battery Charger (Supplied)

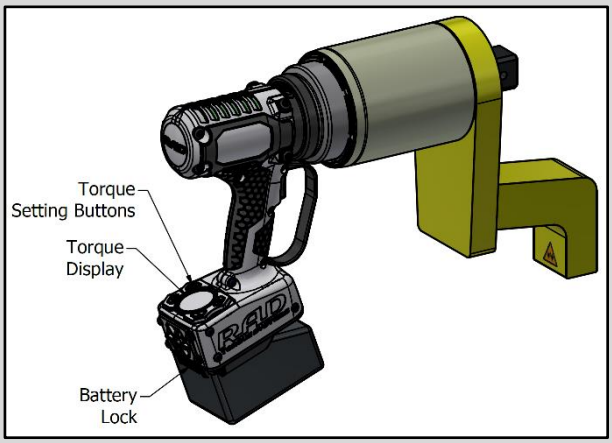

SPECIFICATION

Output Square Drive (Male):	1-1/2" (38.1mm)
Direction:	Forward & Reverse
Torque Accuracy:	+/- 4%
Minimum Output Torque:	1,500 Nm (1,106 lbf.ft)
Maximum Output Torque:	15,000 Nm (11,063 lbf.ft)
Speed:	1.2 rpm
Battery Charging Temp Range:	0°C To 50°C
Battery Charger Voltage:	110V or 240V (dependant on model purchased)
Noise:	Less than 85 dB(A)
Vibration:	Vibration level at handle does not exceed 2.5m/sec (Low)
Tool Weight:	19.3 Kg (42.55 lbs)
Reaction Plate Weight:	10 Kg (22.0 lbs)

ACCESSORIES AVAILABLE

The following accessories are available upon request and can be custom made to suit requirements. Please contact W. Christie (Industrial) Limited for more information:-

- Spare Lithium Ion Battery Packs
- Special Reactions
- Nose Cone Extensions
- Offset Gearbox
- Impact Quality Sockets
- Lifting Bracket
- Torque Checking System (Rundown Fixture)

No statement or data within this literature is warranted or guaranteed to be accurate.

CHRISTIE
TOTAL TORQUE SOLUTIONS

W. CHRISTIE (INDUSTRIAL) LTD
CHRISTIE HOUSE
MEADOWBANK ROAD
ROTHERHAM
SOUTH YORKSHIRE
S61 2NF UK
T: +44(0)1709 550088
E: INFO@WCHRISTIE.COM W: WWW.WCHRISTIE.COM