Smart Socket

SMART SOCKET

The W. Christie Smart Socket transducer is the convenient and flexible way to check the torque on critical bolting applications where full data traceability is required.



For use on any non-impacting square drive torque tool.

- Easy to fit – simple 'o' ring and retaining pin fixture
- Accuracy of +/-2%
- Compact design – no larger than a standard socket
- Powered by internal rechargeable Lithium battery (supplied)
- Easy to read Smart Socket display, with:
  - max. applied torque
  - switchable units of torque (Nm or lbf.ft)
  - 'pass' or 'fail' display - tolerance (%) and target figure for torque set via software
  - storage of up to 750 results
- Automatic standby facility and low battery warning
- Supplied with Windows compatible software (supplied on USB stick):
  - available for use on additional PCs
  - store data as CSV. or Excel
  - store multiple data logs
- Charge via a netbook (not supplied)



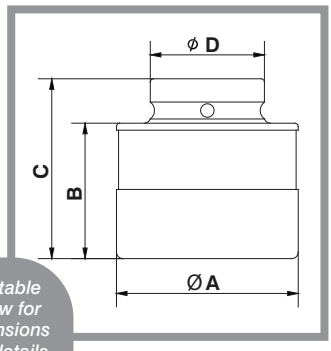

See table below for dimensions and details



Charging and data download via a netbook (not supplied)

Each set includes:
Smart Socket, Socket Retaining Pin and 'O' Ring, USB Cable, Software and Operating Manual.

Model	Drive Size	Torque Range (Nm) Min.	Torque Range (Nm) Max.	Weight Kg	Dimensions (mm) A	B	C	D
33mm Smart Socket	1"	100	2,034	1.5	53	42	100	70
46mm Smart Socket	1"	100	2,034	1.13	83	57	80	53
50mm Smart Socket	1"	200	4,068	1.55	86	62	85	52
55mm Smart Socket	1"	200	4,068	1.45	86	62	85	52
60mm Smart Socket	1"	200	4,068	1.35	86	62	85	52
65mm Smart Socket	1½"	407	8,135	4.67	116	80	112	85
80mm Smart Socket	1½"	407	8,135	3.95	116	80	112	85

HIRE, SALES & ADVICE
01709 550088

CHRISTIE
TOTAL TORQUE SOLUTIONS

t: +44(0)1709 550088 **f:** +44(0)1709 550030 **e:** info@wchristie.com **www.wchristie.com**
W. CHRISTIE (INDUSTRIAL) LTD. Christie House, Meadowbank Road, Rotherham, South Yorkshire, S61 2NF UK